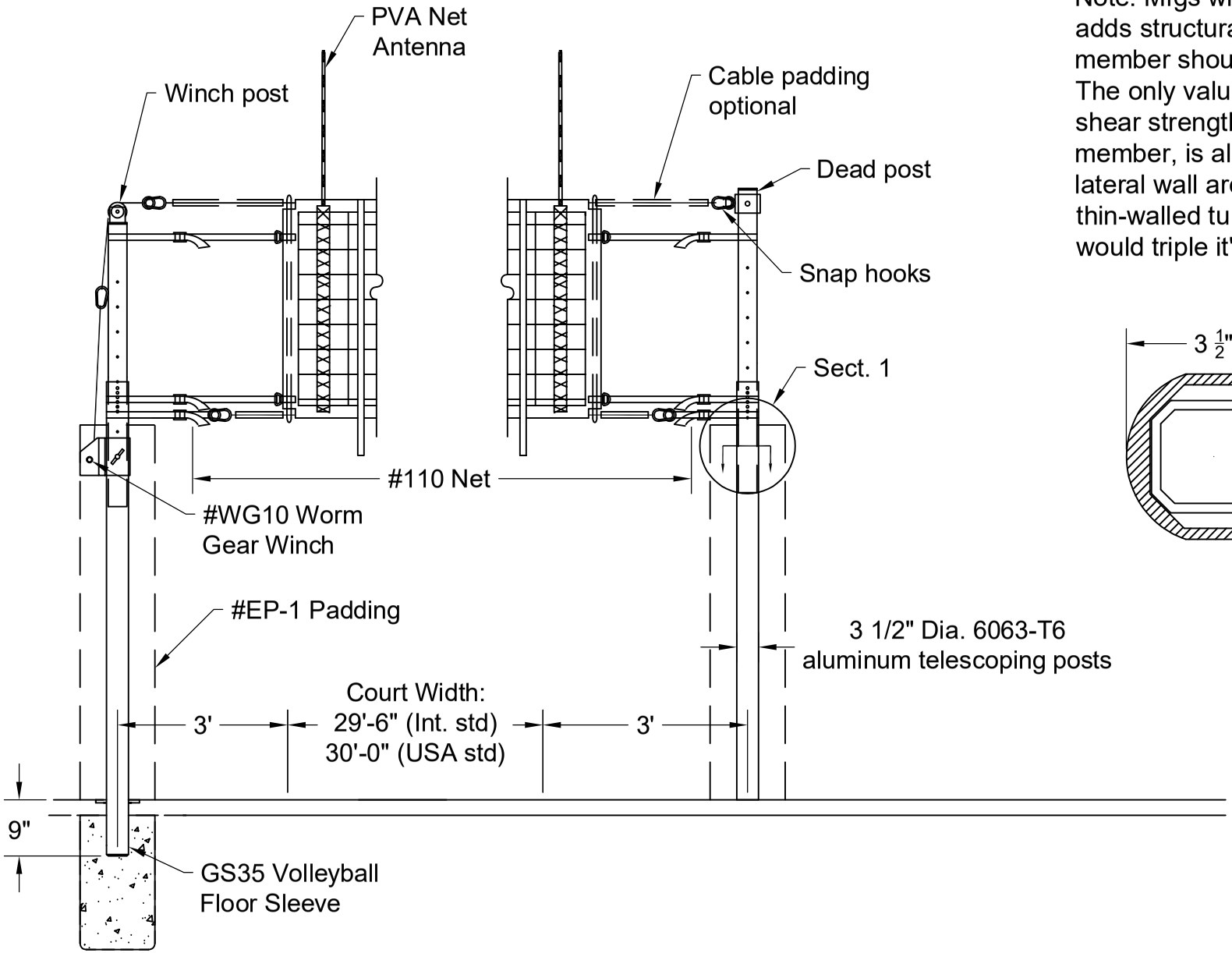

Note: Mfgs who suggest that a "rib" adds structural strength to a tubular member should review their statics. The only value of a "rib" would be for shear strength; which, in a tubular member, is already supplied by the lateral wall area. Except in very thin-walled tubes, the rib material would triple it's value in the tube wall.

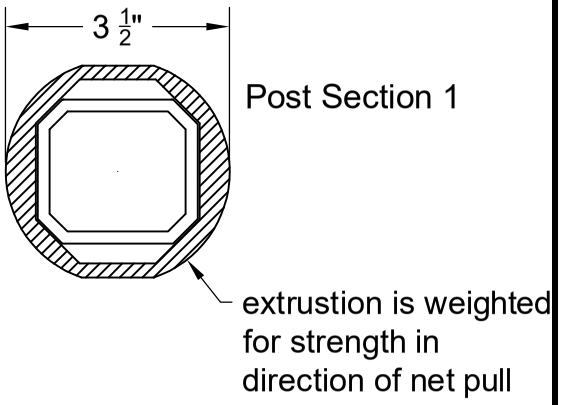

APPS Aluminum Power Post Volleyball System

X Pair - APPS End Posts
X Qty. - #GS35 Floor Sleeves
X Qty. - #110 Volleyball Net System
X Pair - Ep-1 6' End Post Pad
X Set - #PVA Net Antennas
X Set - #PVM Boundary Markers
X Set - Quick-Tite Net Tensioners

X REQUIRED MODEL #APPS

SCALE: NTS

DRAWN: John Buese	PROJECT NAME: -		
DATE: 11/27/2019	ADDRESS: - -		
P.O. NUMBER:	CONTRACTOR: -		
AAICO	ARCHITECT: -		
QUALITY ATHLETIC EQUIPMENT 1859 AVENUE H - ST. LOUIS, MO 63125 www.aaicoinc.com (800) 537-1359 SINCE 1948	SHEET SIZE: 8.5" x 11"	DESCRIPTION: APPS Aluminum Power Post Volleyball System	SHEET -
	PROJECT NO: -		REV 0
PATH: Z:\MIL\			